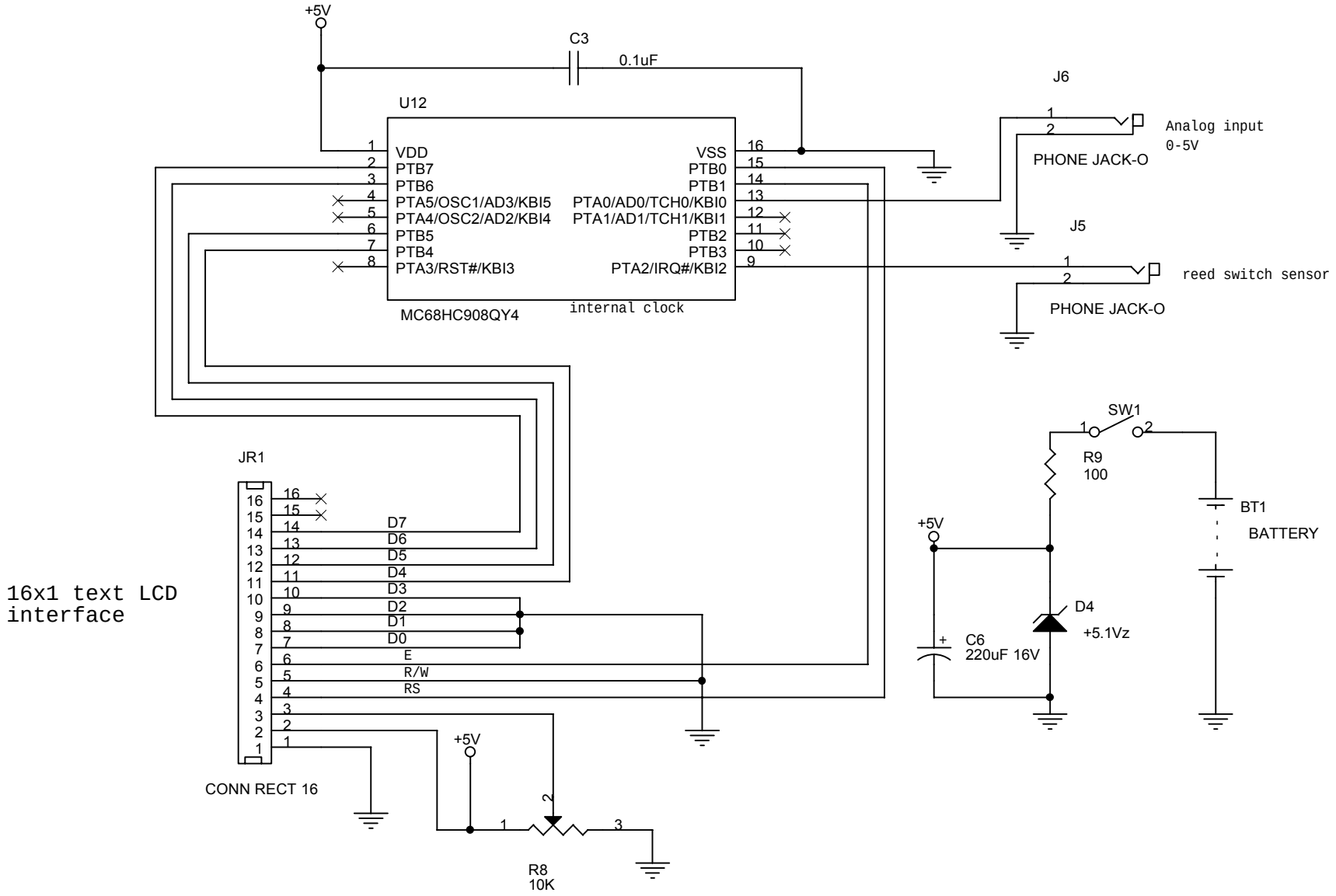

Designed by Wichit Sirichote, kswichit@kmitl.ac.th

Title	Distance Meter V1.0	
Size A	Document Number <Doc>	Rev 1
Date: Sunday, April 04, 2004	Sheet 1 of 1	