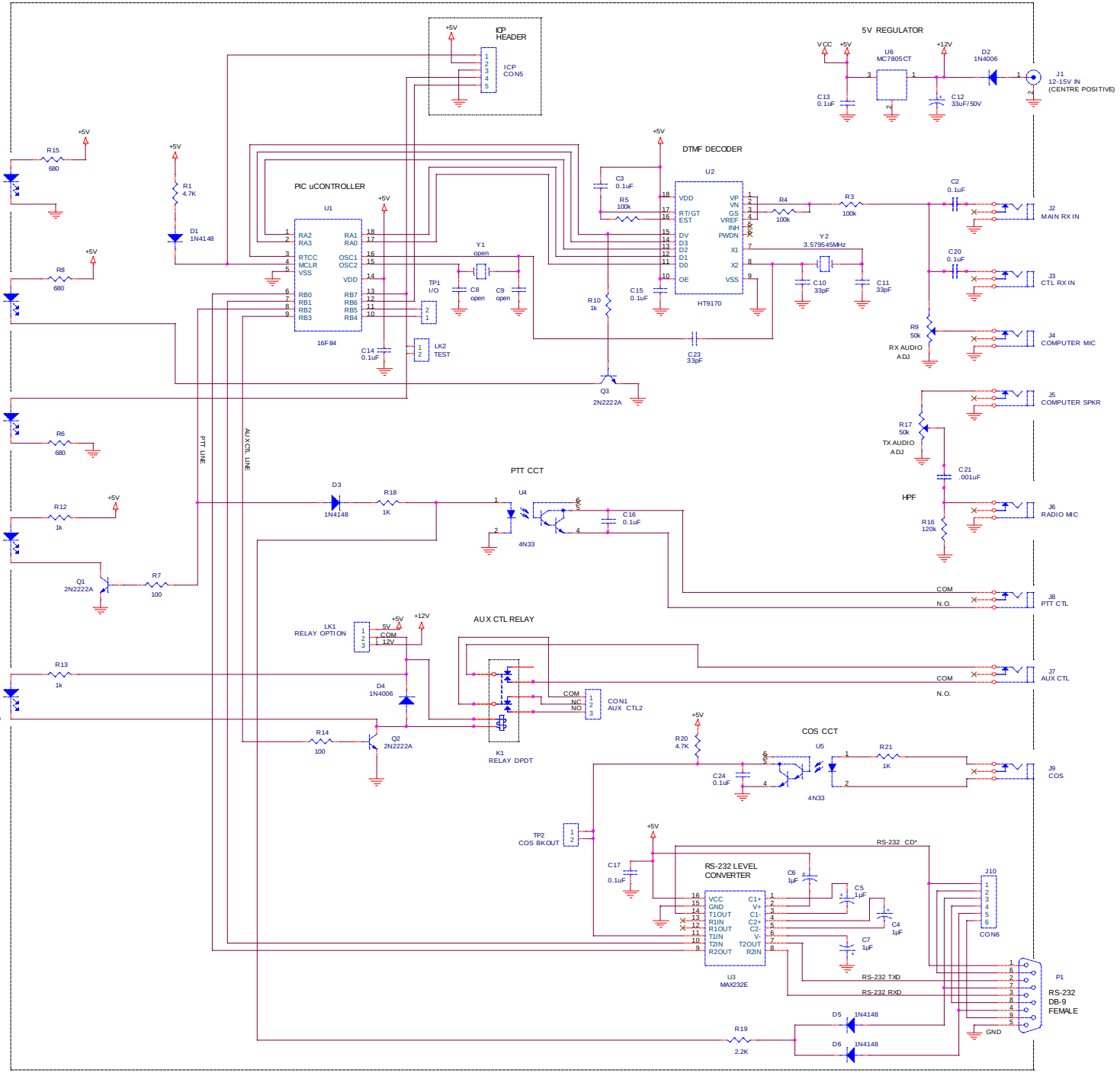

CONNECTOR PINOUTS

J1 = 12-15VDC IN (2.1mm Centre Positive)
J2 = FROM MAIN RX (AUDIO IN)
J3 = FROM CONTROL RX (AUDIO IN)
J4 = FROM COMPUTER MIC (AUDIO OUT)
J5 = TO COMPUTER SPEAKER (AUDIO IN)
J6 = TO TRANSCEIVER MIC (AUDIO OUT)
J7 = AUX CTL RLY (N.O. DRY CONTACTS)
J8 = ISOLATED PTT CONTACTS
J9 = ISOLATED COS INPUT
J10 = ACCESS TO UNUSED RS-232 CTL LINES

K1 SECONDARY CONTACTS
CON1-1 = AUX CTL COM.
CON1-2 = AUX CTL N.C.
CON1-3 = AUX CTL N.O.

TP1 = OPTIONAL I/O...FUTURE USE
TP2 = COS CONDITIONING BREAKOUT

LINK STRAPPING OPTIONS

LK1 1+2 = 5 VOLT RELAY USED
LK1 2+3 = 12 VOLT RELAY USED
LK2 = FOR ICP USE

NOTES:

1. USE 5V or 12V RELAY AT K1. SET LK1 ACCORDINGLY. DEFAULT = 12V. CUT PCB LINK TO 12V BEFORE LINKING TO 5V.

2. CUT PCB LINK AT LK2 WHEN USING ICP. RESTORE CONNECTION WITH A JUMPER FOR NORMAL USE.

Schematic Capture: H.Duff VA3TO *www.iLINKca.com*

Title: *VA3TO iLINK INTERFACE v2.1*

Size: C | Document Number: <Doc> | Rev: v2.1

Date: Tuesday, October 15, 2002 | Sheet 1 of 2